BOLLARDS

Design and testing



Rev.	Date	Text	By:	Control:
001	2015.01.02	Layout	SON	AHK

During the planning and design of a new quay, it is important to design moorings to take care of all the load situations that may arise.
There are several parameters that must be reviewed and, in some situations, especially for multi-use quays and in case of significant variation in design ships, a compromise must be reached to achieve a solution.
Bollards must be able to withstand all loads from moorings.

A list of relevant parameters with chapter, heading and page reference.

1. Introduction 3
2. Mooring 4
3. Loads 8
4. Standards and loading combinations 9
5. Sectors for loads. 12
6. DNV Approval of new Bollards. 13
7. Full-scale testing of existing Bollards. 14

This document will provide a general introduction to issues related to the design of Bollard types, location, required capacity and verification (FEA and proof loading). This document provides a simplified presentation of functions and requirements that must be satisfied for the mooring situation to be functionally satisfactorily.

The content presented is of an orienteering nature and all loading situations must be detailed by qualified personnel with experience in the area. Nyvoll Consult as is not responsible for the use of the document's content.

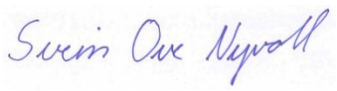

Svein Ove Nyvoll
General Manager
Nyvoll Consult as Org. Nr: 993 172 537
www.nyvcon.no

1. Introduction

Ships come with different shapes and forms, based on the function that the ship should have or the cargo that the ship is carrying. Different ships have different locations for winches and cables.
When planning mooring, you must plan for the types of ships that will call at the quay and the frequency of calls. It is quite possible to moor a ship that differs a lot from the design ship, both in shape, function, and size. Many combinations of ships can be allowed to moor even if the ship belongs to a completely different category of vessel than the one for which the quay is designed for.

From an economic point of view, it is not appropriate to design the mooring for other types of ships than those that are expected to call. Therefore, it is important to obtain information about which ships are expected to moor and have an idea of which ships may arrive in the future.
Many different design ships will in turn, provide many design criteria that must be met which provide more complex design and normally increased construction costs.

The picture beneath shows typically mooring of a ship. The use of stern line and bow line can vary and is not considered necessary to the extent that the vertical angle for spring lines is large so that longitudinal load can be documented as being occupied in these. It is also important that mooring lines have a relatively equal length and elasticity to withstand breaking the shortest lines before the long lines have achieved sufficient strain.

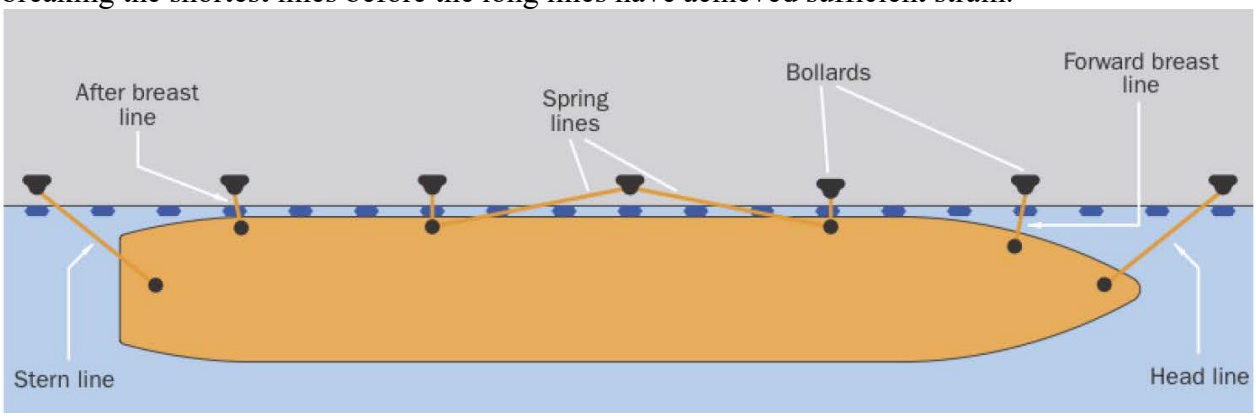

Size of bollards in relation to design ships and applied loads can also vary. For cargo ships and tankers, the underlying table can be a starting point, while ships with a large windbreak often require larger bollards in relation to the ship's weight. If multiple mooring lines are allowed to be used on bollards, larger bollards might also required.

Displacement	Breaking load
20,000	60
50,000	80
100,000	100
200,000	150

Mooring lines can consist of ropes or wire in different dimensions. Normal capacity is up to 80T and it must be expected that multiple mooring lines can be placed on each bollard (but best practice should limit this to 2 lines). In recent times, ropes in dynema have also become available with high strength and low weight. It is up to the ship's captain to verify that the ship is moored safely.

2. Mooring

Mooring of ships is designed based on the total loads applied to the ship from wind, waves and current. Particular attention must be paid to the angles of mooring lines both horizontally and vertically in relation to the direction of the applied load. Vertical inclination of cables can vary depending on the load situation for the ship, water level and height difference between bollards on the quay and cable ties on the ship. For transverse cables, the distance from the ship to the bollard will be very decisive for the effect of the direction of force. Large distance from the ship to the bollard reduces loss of direction in the cable. To the extent that the direction of the cargo that affects the ship deviates from cable directions, the load in the cable must be increased corresponding to the direction deviation.

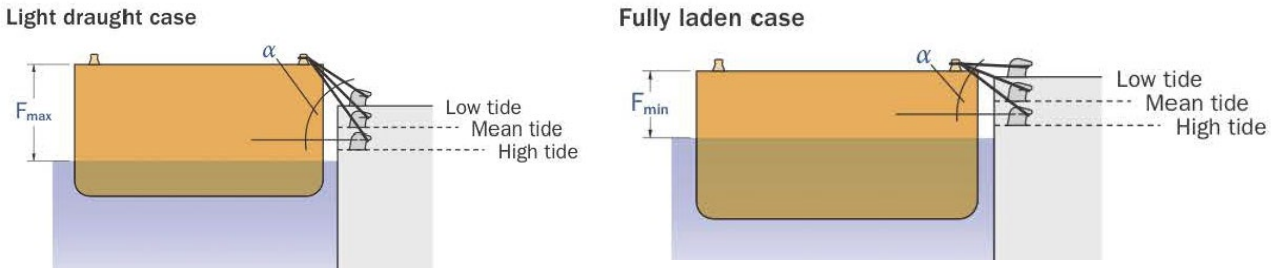

There are several varieties of bollards





Samples of fixed bollards. Typical standard sizes range from 15T to 200T.



Samples of Quick Release Hooks.



Mooring using vacuum suction plates on load arms.

Mooring terminology, recommended principle:

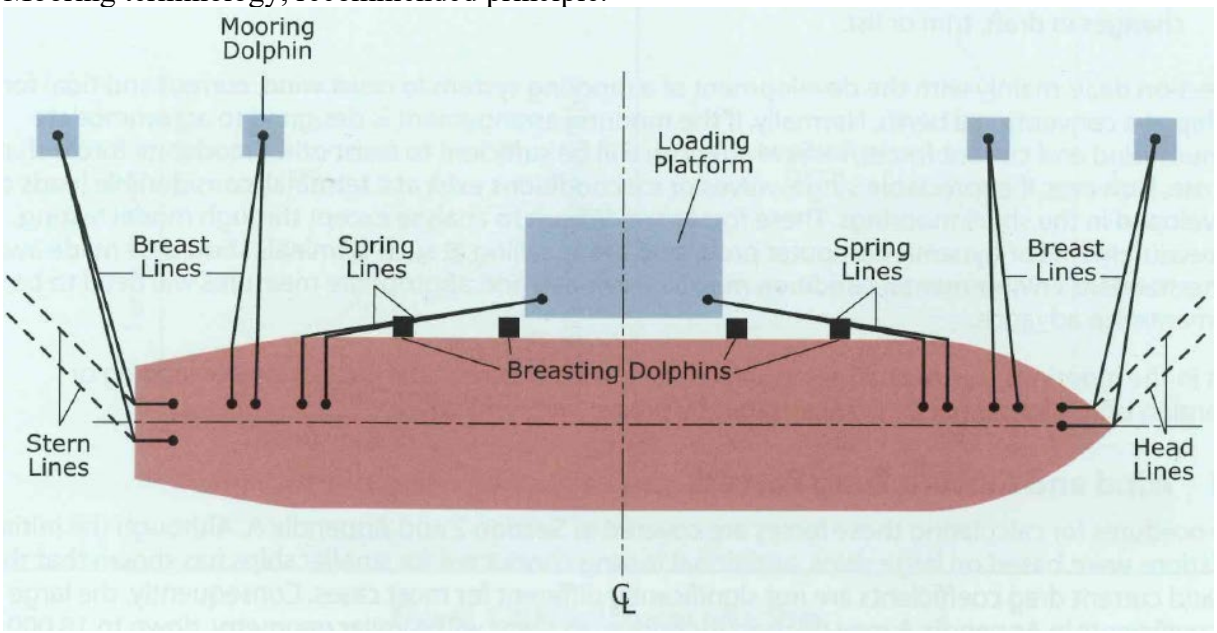

Breast lines are recommended to be placed as perpendicular as possible to the ship's longitudinal axis with the largest horizontal angular deviation of 15degrees.

Breast lines are subject to loads perpendicular to the ship, while spring lines are subject to loads in the ship's longitudinal direction. The Torque arm between bollards and the ship's longitudinal axis is stabilized by tension in breast lines and pressure against fenders.

Although the mooring principle above applies to tankers, the placement of cables and bollards is well suited for other ships as well.

Recommended principle for mooring with specified horizontal load angles for ropes:

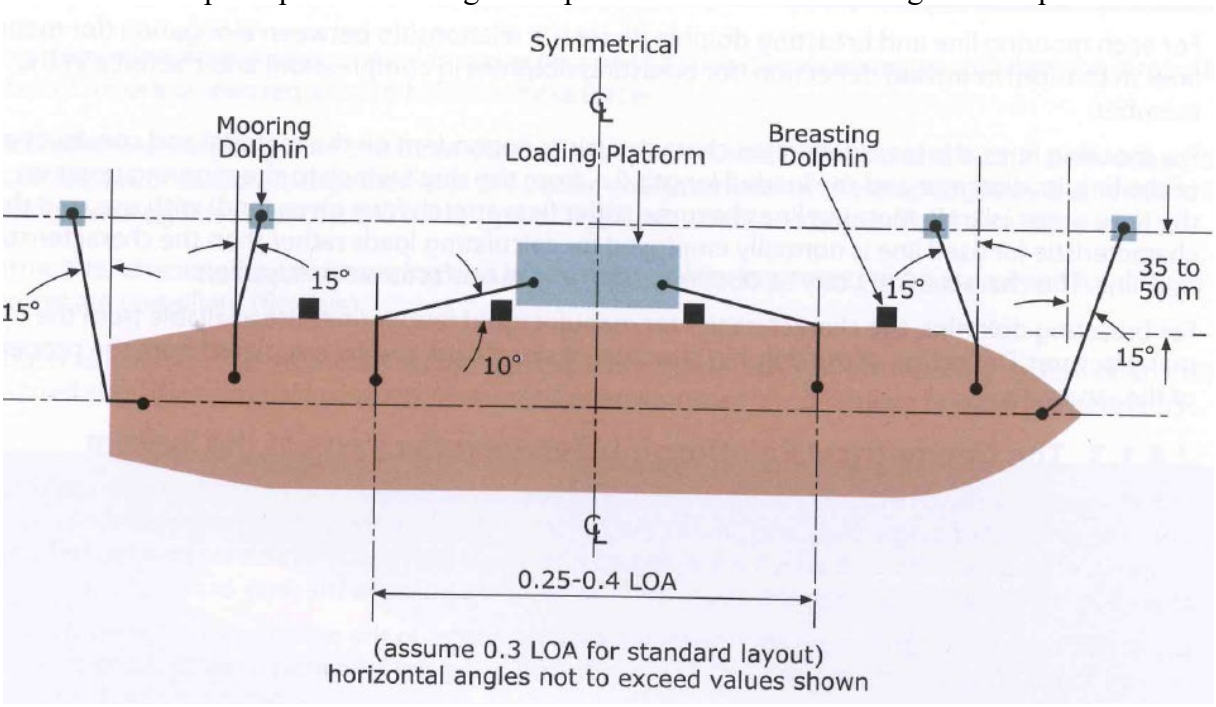

Recommended upper vertical angle on ropes when planning mooring for design ships:

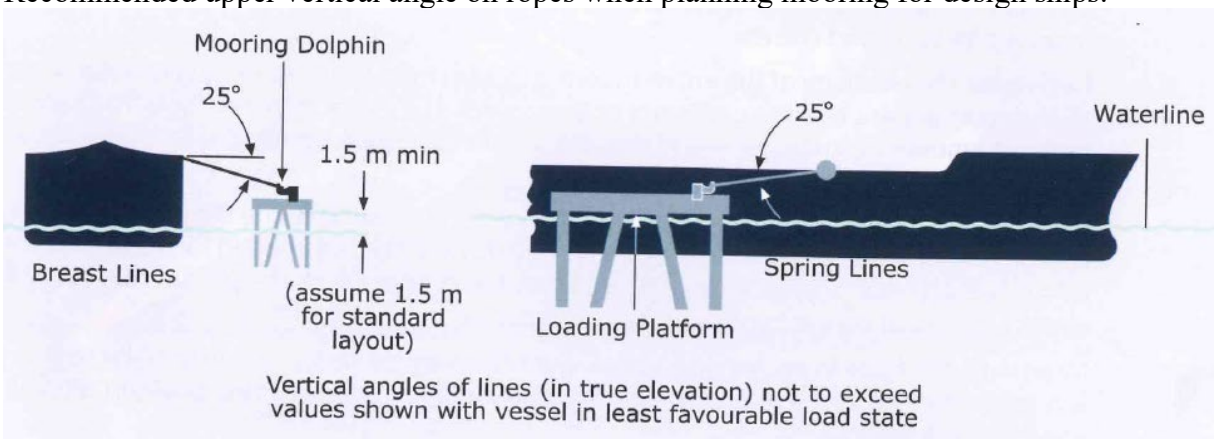

It is also worth noting that different material in ropes gives different strain and a combination of different material in ropes and / or different rope lengths can result in the breaking load being exceeded, especially in short ropes with little elasticity.

Figure showing different strain for different variants of cables in varying material:

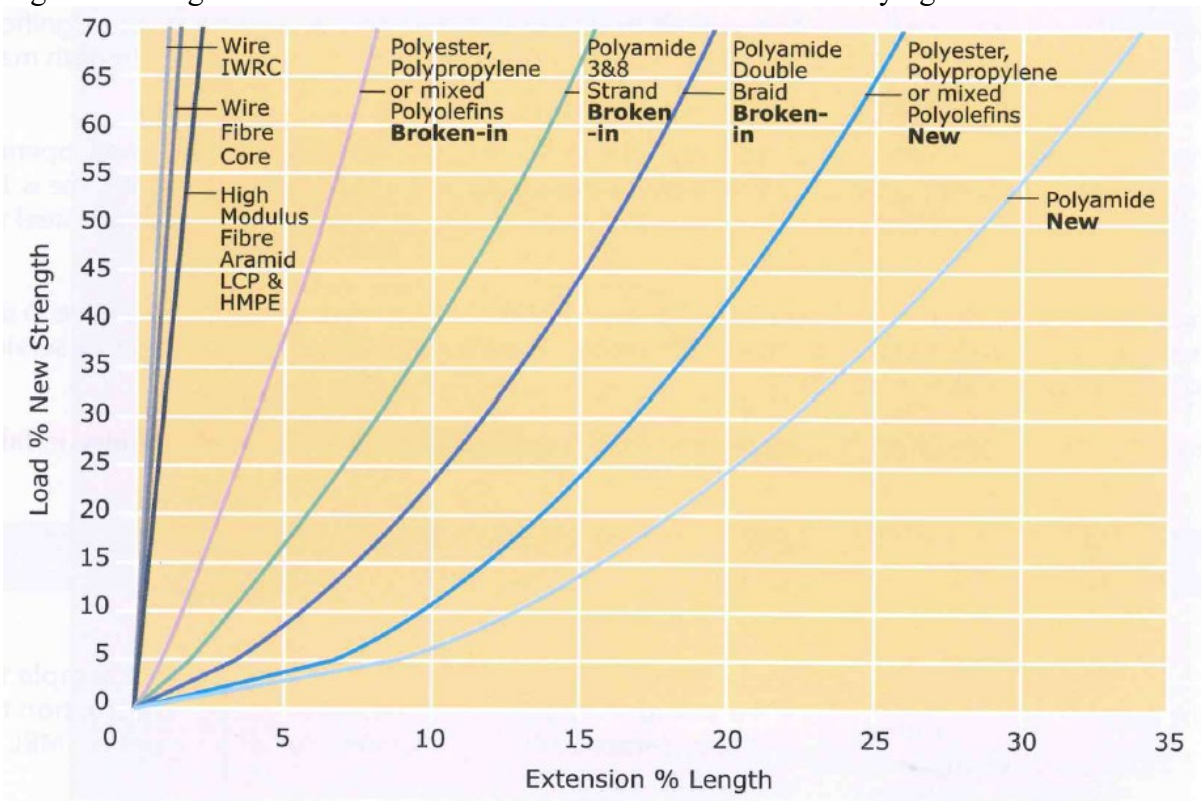

3. Loads

Mooring loads and thus loads on bollards are mainly generated from wind, waves and currents that affect the moored ship. To a certain extent, loads from ice and water levels will also affect moorings. For smaller vessels, ropes can also be used actively during calling and when departing.

At oil and gas terminals, it is common to define limit values for wind, waves and current for the ship's call, loading / unloading, as well as when the ship must disconnect cargo arms and leave the quay. For larger ships, this method can also be used for other types of ships and ports, especially at multi-use quays where the use and calls vary throughout the year.

Cruise ships have a large wind deflector and can be expected to call only in the summer. In the case of multi-use quays (possibly also other quays), it may be natural to define upper limit values for natural loads, which means that the quay's total capacity of bollards does not have to be increased very much to accommodate these ships. It is also worth noting that gusts of wind must exceed a period of approx. 30 sec for larger ships to be significantly affected. When designing, the corresponding gust factor on the wind load should be used as a basis, Factors for gust wind as stated in design codes for fixed structures on land should be used.

If limit values for natural loads are expected to be exceeded in weather reports or that the local weather station shows exceedance, the ship must leave the quay and wait for the weather situation before a new call can be accepted. Periods where the limit value for natural loads is exceeded are defined as downtime.

4. Standards and loading combinations

Norway has no dedicated port standards. Mooring loads and thus loads on bollards are mainly generated from wind, waves and currents that affect the moored ship. The loads are transferred from the ship to bollards via mooring ropes. It is only NS-EN1990: 2002. Appendix A2 Application for bridges that specify specific load factors for wind, waves, and currents.
The alternative is to use the general part of NS-EN 1990 and define mooring loads as "other variable loads" with a somewhat smaller load factor for the ultimate limit state.

We recommend defining and combining loads from the moored ship in accordance with NS-EN1990: 2002 Appendix A2 so that calculations are anchored as much as possible in current regulations with a clear choice of load factors and simultaneity factors for all load situations and load combinations.

Ψ-Factor for loads (Table NA.A2.1)

Action	Symbol		ψ_0	ψ_1	ψ_2 [5]	$\psi_{1,infq}$ [1]
Traffic loads (see EN 1991-2, Table 4.4)	gr1a (LM1 + horizontal loads + pedestrian or cycle-track loads)	Tandem system (TS)	0,7 [3]	0,7	0,2/0,5	0,8
		Uniformly distributed load (UDL)	0,7 [3]	0,7	0,2/0,5	0,8
		Horizontal loads	0,7 [3]	0,7	0,2/0,5	0,8
		Pedestrian+cycle-track loads [2]	0,7 [3]	0,7	0,2/0,5	0,8
	gr1b (single axle)		0,7 [3]	0,7	0,2/0,5	0,8
	gr2 (horizontal forces)		0,7 [3]	0,7	0,2/0,5	0,8
	gr3 (pedestrian loads)		0,7 [3]	0,7	0,2/0,5	0,8
	gr4 (LM4 – crowd loading))		0,7 [3]	0,7	0,2/0,5	0,8
	gr5 (LM3 – special vehicles))		-	-	-	-
Wind forces	F_{wk} - Persistent design situations		0,7	0,6	0/0,5	0,8
	F_{wk} – During execution		0,8	-	-	-
	F_w^*		0,7	0,6	0/0,5	0,8
Thermal actions [4]	T_k		0,7	0,6	0/0,5	0,8
Snow loads	$Q_{Sn,k}$ - on roofs, etc.		0,7	0,6	0,2/0,5	0,8
	$Q_{Sn,k}$ - during execution		0,8	-	-	-
Construction loads	Q_c		1,0	-	1,0	-
Ice pressure	-		0,7	0,6	0/0,5	0,8
Waves and currents	-		0,7	0,6	0/0,5	0,8
Water pressure, variable part	-		0,7	0,6	0/0,5	0,8
Earth pressure, variable part	-		0,7	0,6	0/0,5	0,8
Friction actions from bearings	-		0,7	0,6	0/0,5	0,8
Other variable actions	-		0,7	0,6	0/0,5	0,8

[1] $\psi_{1,infq}$ is a factor for defining infrequent values of actions
[2] The combination value of the pedestrian and cycle-track load, mentioned in Table 4.4a of EN 1991-2, is a "reduced" value, and ψ factors are applicable to this value.
[3] Where wind loads are regarded as leading variable action represented by F_{wk}, should the value of ψ_0 for traffic loads be set equal to 0, see also A2.2.2(5).
[4] Temperature actions shall be taken into account in all load combinations, also in ultimate limit states, if the effects are unfavourable.
[5] When calculating crack widths according to NS-EN 1992 for load combination "quasi-permanent", the value 0,5 shall be used. The values 0,2 and 0 may be used, respectively, when calculating the long-term effects of time-dependent properties.

Ultimate Limit State (ULS) Table NA.A2 (B):

Persistent and transient design situations	Permanent actions		Prestress	Leading variable action (*)	Accompanying variable actions (*)
	Unfavourable	Favourable			
(Eq. 6.10 a)	$\gamma_{G,j,sup}\ G_{k,j,sup}$	$\gamma_{G,j,inf}\ G_{k,j,inf}$	$\gamma_P\ P$	$\gamma_{Q,1}\ \psi_{0,1}\ Q_{k,1}$	$\gamma_{Q,i}\ \psi_{0,i}\ Q_{k,i}$
(Eq. 6.10 b)	$\xi\ \gamma_{G,j,sup}\ G_{k,j,sup}$	$\gamma_{G,j,inf}\ G_{k,j,inf}$	$\gamma_P\ P$	$\gamma_{Q,1}\ Q_{k,1}$	$\gamma_{Q,i}\ \psi_{0,i}\ Q_{k,i}$

(*) Variable actions are those considered in Tables NA.A2.1 to NA.A2.3.

NOTE 1 For the ultimate limit state it shall be verified using Equations 6.10a and 6.10b that the the structural behavior of bridges is in accordance with the assumed calculation model, other than minor changes (e.g. bearing uplift, disregarded tensile piles, plastic hinges, etc.) which is acceptable provided that the structure is designed in accordance with the changed conditions.

NOTE 2 The following set of γ and ξ values shall be used in Equations 6.10a and 6.10b:

$\gamma_{G,sup}$	=	1,35	for permanent actions, except those listed below [1) 2)]
		1,00	for irreversible imposed loads [3)]
		1,20	for permanent part of water pressure
$\gamma_{G,inf}$	=	1,0	for permanent actions [1) 2)]
		0	for irreversible deformation loads [3)]
		1,0	for water pressure
ξ	=	0,89	for selfweight [1)]
γ_P	=	value defined in the relevant Eurocode [4)]	
γ_Q	=	1,35	for road and pedestrian traffic, when unfavourable (0 when favourable)
γ_Q	=	1,5	for railway traffic, when unfavourable (0 when favourable). γ_Q = 1,2 shall be used for load model SW/2
γ_Q	=	1,60	for actions from wind, waves and currents, when unfavourable (0 when favourable)
γ_Q	=	1,20	for thermal actions, when unfavourable (0 when favourable)
γ_Q	=	1,35	for actions from bearing friction and variable part of water pressure, when unfavourable (0 when favourable)
γ_Q	=	1,50	for other variable actions, when unfavourable (0 when favourable)

1) These values applies for self-weight of structural and non-structural elements, ballast, soil, removable loads, etc.

2) The characteristic values of actions from one source, e.g. self-weight, are multiplied by $\gamma_{G,sup}$ when the resulting total load effect is unfavourable, and by $\gamma_{G,inf}$ when the resulting total load effect is favourable. This also applies when different materials are involved.

3) Irreversible imposed loads can among others be uneven settlements, creep and shrinkage. Reference is made to NS-EN 1992-1-1 for γ values for shrinkage. See also NS-EN 1991 to NS-EN 1999 for any other γ values to be used for applied deformations. Irreversible imposed loads shall always be taken into account when the effects are unfavourable.

4) Where relevant, the values are applicable also for indirect effects of prestressing, i.e. as constraining forces in statically indeterminate structures.

NOTE 3 See above footnote 2. See also A2.3.1(2).

NOTE 4 For particular verifications, the values for γ_G and γ_Q may be subdivided into γ_g and γ_q and the model uncertainty factor γ_{Sd}. A value of γ_{Sd} in the range 1,0 – 1,15 may normally be used.

More detailed rules may be given for the individual project.

NOTE 5 For actions from water not covered in this table or by NS-EN 1997 (e.g. running water), may the individual project specify the load combinations to be used.

Accidental Limit State (ALS):

$Q_{ad} = 1{,}00 \cdot G + 0{,}5 \cdot NL + 0{,}5 \cdot F + A_d$

Seismic situations:

Design situation	Permanent actions		Pre-stress	Leading accidental or seismic action	Accompanying variable actions (**)
Seismic situation (*) (Eq. 6.11a/b)	$G_{k,j,sup}$	$G_{k,j,inf}$	P	A_d	$\psi_{2,i}\ Q_{k,i}$
Seismic situation (***) (Eq. 6.12a/b)	$G_{k,j,sup}$	$G_{k,j,inf}$	P	$A_{Ed} = \gamma_I\ A_{Ek}$	$\psi_{2,i}\ Q_{k,i}$

(*) For design accidental situation, other variable actions are considered using their quasi-permanent value.

(**) Variable loads are those considered in Tables A2.1 to A2.3.

(***) For the individual project particular seismic design situations may be specified. For railway bridges only one track need to be considered as ballasted, and load model SW/2 may be neglected.

NOTE For all non-seismic actions the value $\gamma = 1.0$ is used.

Seismic situations should be checked according to above load-combinations.

Serviceability Limit State (SLS):

Combination	Permanent actions G_d		Pre-stress	Variable actions Q_d	
	Unfavour-able	Favourable		Leading action	Other actions
Characteristic	$G_{k,j,sup}$	$G_{k,j,inf}$	P	$Q_{k,1}$	$\psi_{0,i}Q_{k,i}$
Infrequent	$G_{k,j,sup}$	$G_{k,j,inf}$	P	$\psi_{1,infq}Q_{k,1}$	$\psi_{1,i}Q_{k,i}$
Frequent	$G_{k,j,sup}$	$G_{k,j,inf}$	P	$\psi_{1,1}Q_{k,1}$	$\psi_{2,i}Q_{k,i}$
Quasi-permanent	$G_{k,j,sup}$	$G_{k,j,inf}$	P	$\psi_{2,1}Q_{k,1}$	$\psi_{2,i}Q_{k,i}$

Control of concrete crack width should be carried out in loading combination" Frequent" according to NS-EN1990-1-1:2004+NA:2008 Table NA.7.1N as concrete exposure class XS3 should be chosen.

5. Sectors for loads.

Instructions in port construction, Parts 1 and 2, Norwegian Civil Engineers Association 1998, recommends a horizontal cargo intake sector ± 90 degrees and a vertical cargo intake sector 0 – 60degress. In our opinion, this is an outdated recommendation that presents unnecessarily large challenges and costs in design and execution.

Figure showing the recommended load-bearing sector in Instructions in port construction.

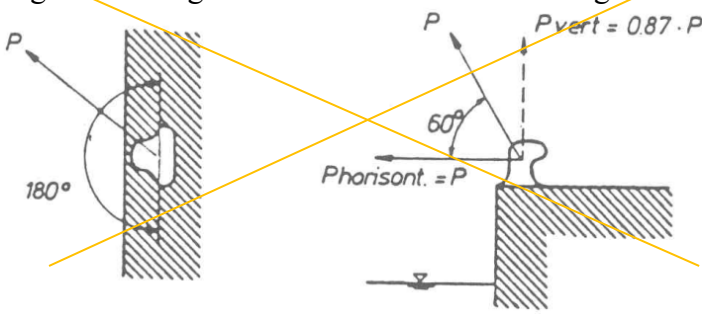

We recommend that bollards are designed for realistic load sectors both horizontally and vertically. Longitudinal springliner will always have a horizontal angle in relation to the quay front, which in the fewest cases can be less than 10degrees. It is of course possible to achieve a relatively large vertical angle for ropes on bollards mounted in the quay front, especially if the ropes are pulled directly from the bollard and up onto the ship's deck. However, there is a limit to how large loads can be mobilized in moorings with a large vertical angle. Especially for bollards with a capacity greater than 100T, it is difficult to generate full load in vertical sectors above 30-45degrees.

Recommended horizontal load-bearing sector up to ± 80degrees for standard bollards mounted in the quay front. For ordinary bollards mounted elsewhere, the potential load-bearing sector with an upper limit of ± 80degrees is considered. Bollards with a 360egrees horizontal load-bearing sector are of course built for this load sector.

The recommended smallest vertical load-bearing sector is reduced by the distance from the quay front according to the formula and adapted to the size of the bollard:

Bollard ≤ 100T	**Bollard>100T/<200T**	**Bollard ≥ 200T**
(Height difference ≤ 10m)	(Height difference ≤ 12m)	(Height difference ≤ 15m)
$\alpha = 60^{o}$, L ≤ 6m	$\alpha = 45^{o}$, L ≤ 12m	$\alpha = 30^{o}$, L ≤ 26m
$\alpha = (66\text{-}L)^{o}$, 6 ≤ L ≤ 21	$\alpha = (57\text{-}L)^{o}$, 12 ≤ L ≤ 33	$\alpha = (56\text{-}L)^{o}$, 26 ≤ L ≤ 56
$\alpha = 25^{o}$, L ≥ 21m	$\alpha = 20^{o}$, L ≥ 33m	$\alpha = 15^{o}$, L ≥ 56m

α = upper angle of Mooring line.
L = horizontal distance between bollard and ship.
Height difference is the upper height difference in meters between the ship's cable ties and the bollard on the quay without correcting the content of the formula.

It is noted that the vertical load-bearing sector applies to the foundation of the bollard. To the extent that the supplier of the bollard does not allow a vertical load intake angle corresponding to that stated above, the smallest value applies. The bollard head must also be designed to hold the ropes at rope angles as indicated above.

6. DNV Approval of new Bollards.

DNV Approval of a land-based bollard requires a complete review of load-bearing elements from the mooring point of attack to safe load transfer of all loads into the ground. The inspection shall be carried out by DNV and confirm that the capacity of the bollard head and bollard foundation has been inspected and that the capacity corresponds to the required safety level, for specified loads and load sectors, in accordance with the referred standards and design basis. Any operational limitations, which reflect load combinations assumed in the design, will be reproduced in the declaration.

A complete design package must be prepared and sent to DNV, where calculations and building drawings are included. DNV prepares a verification report that will reproduce the loads and load sectors for which the bollard is designed.

The time, frequency, and duration of inspections during the construction phase are decided from project to project. Inspections must be organized and agreed as early as possible in the project. The implementation of the construction, the quality system and the test results must be reviewed and approved by DNV as part of the inspection. The control also includes any prefabricated elements. If the material properties have not been found satisfactory, new analysis of the construction may be necessary before approval or possible disapproval.

The design of the bollard head and bolts shall be carried out in accordance with national legislation in the country where the bollard is to be built. Bollard head must be designed for the load and the load angles the foundation is designed for. The capacity of the bollard head and the connection to the foundation must be documented by calculations or FEM analysis.

The material testing of bollard material must be witnessed by a third party.
Material certificates stamped and approved by a recognized third party shall contain the following:

- ✓ Manufacturer's and test site name
- ✓ The manufacturer's responsible person for quality control
- ✓ Date of test
- ✓ Bollard ID
- ✓ The material's production serial number
- ✓ Material class and specification standard
- ✓ Material properties included:
- ✓ Yield strength
- ✓ Breaking strength
- ✓ Elongation at break
- ✓ Ductility
- ✓ Chemical properties
- ✓ Details of how the heat treatment is carried out in accordance with the relevant material standard.

Test that proves that the bollard can withstand the load it is dimensioned for must be presented if available. The dimension of the bollards must be checked, and tolerances and deviations must be documented.
A more detailed description is given by DNV in a memo nr 143ESM2-8/OMAJ.

7. Full-scale testing of existing Bollards.

A full-scale load test can replace the design control of the bollard with its foundation if control of the design cannot be carried out as specified in the previous chapter. Load testing is not an alternative to a thorough design process.

If DNV is the control body, a test program must be submitted for assessment and approval before testing. The test load used shall cover all the horizontal load sectors, and the load shall be held for a minimum of 10 minutes by means of a tugboat, supply ship or similar vessel. DNV shall witness the testing on board the vessel and issue a condition report upon completion of the test.

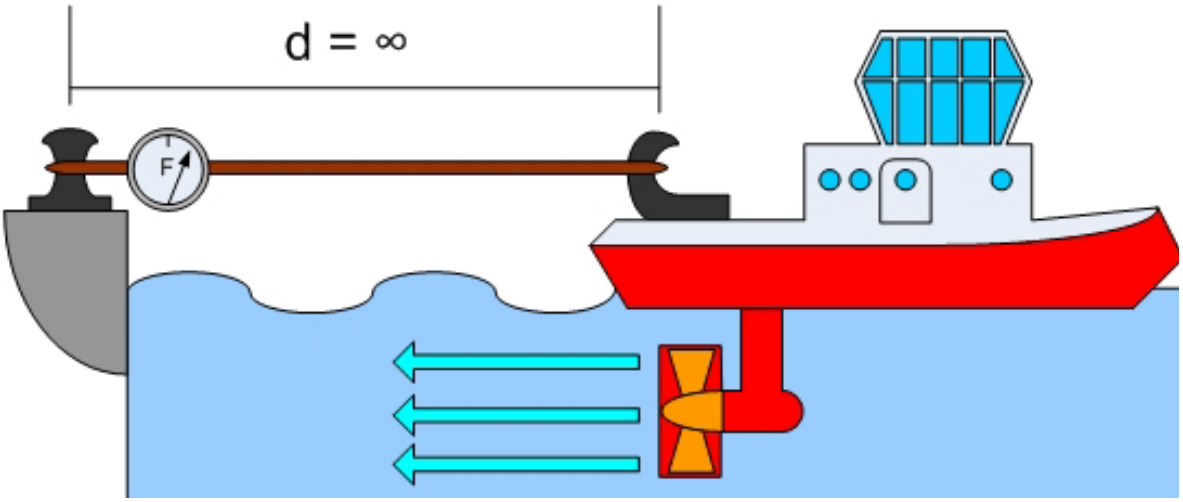

Before testing, the bollard's characteristic load capacity and load sectors must be obtained. The test load applied to the bollard shall be equal to the characteristic load multiplied by a load factor given in the current safety standard and the test load applied to the bollard shall at least correspond to the characteristic load multiplied by the load factor given in current regulations and the load shall be applied in all horizontal load sectors.



After a successful testing, a visual inspection of the bollard and foundation must be carried out. The inspection shall cover all elements that help to carry the load from the bollard head down into the ground, and which are practically possible to inspect.

The full range of load combinations to which the quay is exposed during operation cannot always be documented by load testing which normally only loads one bollard at a time. To the extent that there are several bollards fixed in the same foundation (same section of the quay, etc.), load testing will not be carried out continuously without all full-scale bollards being tested simultaneously.

Test loading of the bollard head can be performed by loading the bollard head for 10 minutes in the different directions in which the bollard is to take up loads. If possible, the documentation from the testing must contain reference to the bollard head material to satisfy traceability requirements. The test can be performed as follows:

• The bollard is attached to a test rig and the load can be applied with a winch, hydraulic press, or similar device.
• All load sectors in which the bollard is to take up loads must be tested.
Equipment used must be mounted so far from the bollard that direct load transfer from the test equipment to the bollard attachment does not take place.



It is noted that the test of the bollard head is not a good test as the anchoring of foundations are not checked, plus the loads applied are not in the mooring pattern of the usage of the bollard. If there are several bollards attached to the same foundation or if the bollard is attached to an older gravity structure (block wall quay, etc.), testing the bollard head can provide false security and is not recommended as a replacement for a full-scale test.